Fluorescent lamp Spectralux®Plus Ring
NL-T9 32W/840C/G10Q

Radium

Product Datasheet Date: 27.11.2026



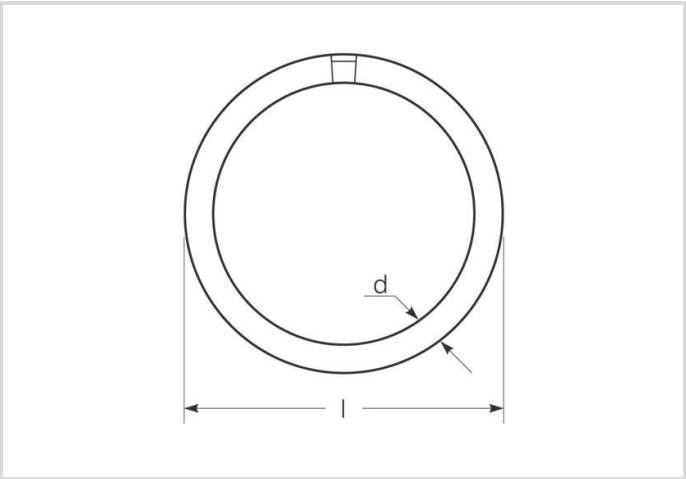

G	2100	4000K	7 500h	Dimmable

General Data

Article No.	31219608
Codice	NL-T9 32W/840C/G10Q
Product EAN	4008597196089
Box quantitiy (pcs.)	12
EAN Box	4008597596087
Gross weight of box in kg	3.969
Length of box in m	0.46
Width of box in m	0.322
Height of box in m	0.318
Product weight	176 g
Product status	Inattivo

Electric Parameters

Wattage	34.1 W
Energy consumption kWh/1000h	35
Lamp voltage	84 V
dimmable	Sì

Fluorescent lamp Spectralux®Plus Ring
NL-T9 32W/840C/G10Q

Radium

Light Application Parameters

Luminous flux	2100 lm
Rated lamp luminous flux	2100 lm
max. luminous flux at	25 °C
Beam angle	360 °
Efficacy / Luminous efficiency	62 lm/W
Total mains efficacy	62 lm/W
Light colour	universal white
Code of light color	840
Colour temperature	4000 K
Color coordinate X	0.380
Color coordinate Y	0.380
Color rendering index	? 80
Lumen maintenance at 2000h	0.80
Lumen maintenance at 4000h	0.74
Lumen maintenance at 6000h	0.72
Lumen maintenance at 8000h	0.70

Service Life

Service life	9000 h
Service Life	6300 h
Lamp survival factor at 2000h	0.99
Lamp survival factor at 4000h	0.95
Lamp survival factor at 6000h	0.83
Lamp survival factor at 8000h	0.62

Specification

Energylabel notice	current label, with EPREL registration
Energylabel (G -> A)	G
Tube diameter	29 mm
Length max.	305 mm
Length	305 mm
Burning position	h180
Mercury content	4.8 mg
Lamp shape	Ring
Base	G10q
Colour	White

Fluorescent lamp Spectralux®Plus Ring
NL-T9 32W/840C/G10Q

Radium

Notes on Operation

Burning position	h180
Suitable for emergency lighting	No

Information especially for EPREL

Energylabel notice	current label, with EPREL registration
EPREL ID number	541194

Miscellaneous

EU-date of phase-out	25.02.2025
EU Directive	RoHS
Similar products	43218812

Notes

Fluorescent lamp Ring 29mm diameter, light colour 840, high luminous efficiency, good colour rendering, long life, base G10q. Controllable by Dim-ECG.

Please, refer to www.radium.de/recycling for notes on disposal of burned-out lamps as well as lamp breakage.
The "lifespan L70" described for LED lamps indicates the number of hours when the luminous flux has decreased to 70% of its initial value.
The optinal field 'info about service life' contains the frame conditions according to standards based on which the specific service life has been determined. So, for example, "12B50, 50Hz" means that the mean service life (B50) has been determined with a 12h switching cycle at mains (frequency 50Hz), "3B50, HF" is based on a 3h switching cycle at electronic control gear (high frequency).

Base

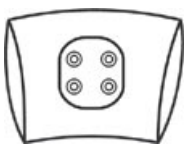

G10q
IEC/EN 60061-1
sheet 7004-54-3

Spectrum

Natural daylight is a mixture of direct sunlight and the light of the sky. Therefore, its spectral composition changes permanently due to the changing time of day. The standardised light classification D65 corresponds to a daylight with a colour temperature of approximately 6500 K.
Every fluorescent lamp type has got an individual spectral power distribution according to its phosphor coating inside the bulb. From this result important properties light colour or colour rendering.
Visible region from 380 to 780 nm; height of graph corresponding with relative spectral emission (400mW/klm) per 10nm.

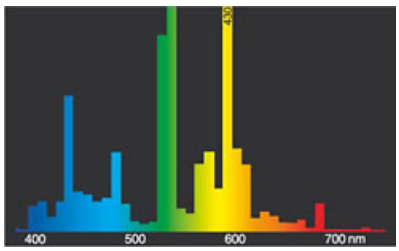

Lichtfarbe 840 Spectralux® weiß (21)

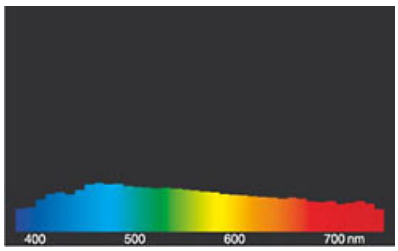

daylight(D 65)

Circuit diagram(s)

Fluorescent lamp Spectralux®Plus Ring

NL-T9 32W/840C/G10Q

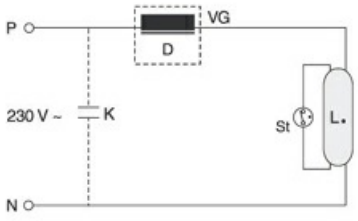

One-lampe ciruit with electronic ballast
Key:
VG = ballast electronic (ECG)
P = phase
N = zero potential
Ctrl = Controller, dimmer

The required control gear (here electronic ballast) for the lamps operation is usually mounted in the suitable luminaire in an appropriate electric circuit. Changes of any kind are to be conducted by qualified and specialised staff, only. Thus, this circuit example is to be understood merely as a technical background information for interested users.

Special features

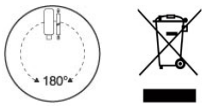

General notes

The technical design data in accordance with DIN and IEC. The producer does not take any responsibility for damage to persons or property in case of unsuitable operation or handling of the product. Operating data and dimensions are valid within the usual tolerances. Related lamp types (different bases, mains voltages) may be available on request. Sale and delivery are effected in accordance with the Radium Terms of Delivery and Payment valid on the day of conclusion of contract. Packing units offer economical advantages to the purchase and logistic department. Please match your quantity volume accordingly. For orders of a minimum quantity (clefts) with a lamp model the amount lower than the volume of each packaging unit, we will invoice 10 % additional charge per lamp type. Technical changes and terms of delivery are reserved. Manipulation of any kind to packaging or product is not permissible as this will violate Radium brand rights. Furthermore, technical properties of the product can change to its disadvantage or even destruction. Therefore, Radium cannot be responsible for consequential damages.
® = Registered trademark
Subject to change without notice. Errors and omissions excepted.

All technical data without guarantee.