Fluorescent lamp Bonalux®Ring
NL-T5 22W/840C/2GX13

Radium

Product Datasheet Date: 24.11.2026



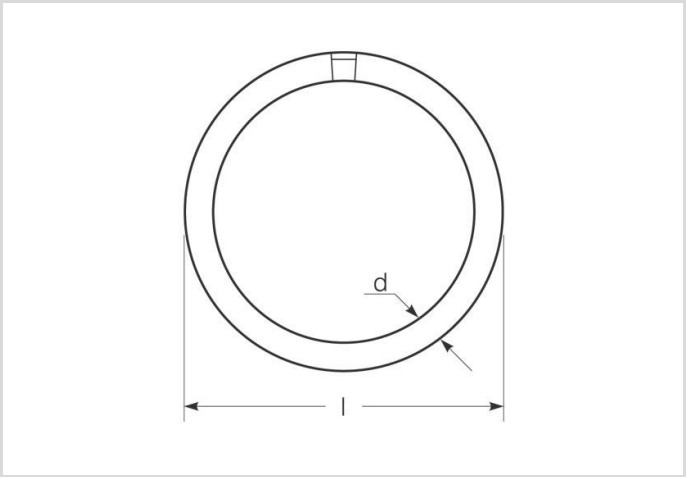

G	1800	4000K	12 000h

General Data

Article No.	31219610
Codice	NL-T5 22W/840C/2GX13
Product EAN	4008597196102
Box quantitiy (pcs.)	12
EAN Box	4008597596100
Gross weight of box in kg	1.893
Length of box in m	0.3
Width of box in m	0.243
Height of box in m	0.249
Product weight	81 g
Product status	Inattivo

Electric Parameters

Wattage	23.8 W
Weighted energy consumption in 1000 hours	24 kWh
Lamp voltage	75 V

Fluorescent lamp Bonalux®Ring
NL-T5 22W/840C/2GX13

Radium

Light Application Parameters

Luminous flux	1900 lm
Rated lamp luminous flux	1800 lm
Beam angle	360 °
Efficacy / Luminous efficiency	76 lm/W
Total mains efficacy	76 lm/W
Code of light color	840
Colour temperature	4000 K
Color coordinate X	0.380
Color coordinate Y	0.380
Color rendering index	? 80

Service Life

Average life	12000 h
Lamp survival factor at 6000h	[0.98]

Specification

Energylabel notice	current label, with EPREL registration
Energylabel (G -> A)	G
Tube diameter	16 mm
Length max.	240 mm
Length	225 mm
Lamp shape	Ring
Base	2GX13
Colour	White

Notes on Operation

Suitable for emergency lighting	No

Information especially for EPREL

Energylabel notice	current label, with EPREL registration
EPREL ID number	541199

Miscellaneous

EU-date of phase-out	25.02.2023
EU Directive	RoHS

Fluorescent lamp Bonalux®Ring
NL-T5 22W/840C/2GX13

Radium

Notes

Fluorescent lamp Ring HE T5-16mm diameter, light colour 840, base 2GX13. Controllable by Dim-ECG.

Please, refer to www.radium.de/recycling for notes on disposal of burned-out lamps as well as lamp breakage.
The "lifespan L70" described for LED lamps indicates the number of hours when the luminous flux has decreased to 70% of its initial value.
The optinal field 'info about service life' contains the frame conditions according to standards based on which the specific service life has been determined. So, for example, "12B50, 50Hz" means that the mean service life (B50) has been determined with a 12h switching cycle at mains (frequency 50Hz), "3B50, HF" is based on a 3h switching cycle at electronic control gear (high frequency).

Base

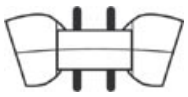

2GX13
IEC/EN 60061-1
sheet 7004-125-1

Spectrum

Natural daylight is a mixture of direct sunlight and the light of the sky. Therefore, its spectral composition changes permanently due to the changing time of day. The standardised light classification D65 corresponds to a daylight with a colour temperature of approximately 6500 K.
Every fluorescent lamp type has got an individual spectral power distribution according to its phosphor coating inside the bulb. From this result important properties light colour or colour rendering.
Visible region from 380 to 780 nm; height of graph corresponding with relative spectral emission (400mW/klm) per 10nm.

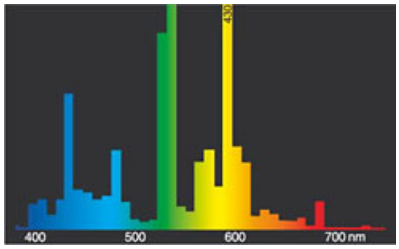

Lichtfarbe 840 Spectralux® weiß (21)

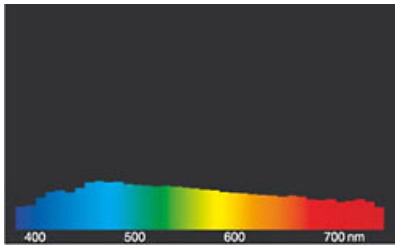

daylight(D 65)

Circuit diagram(s)

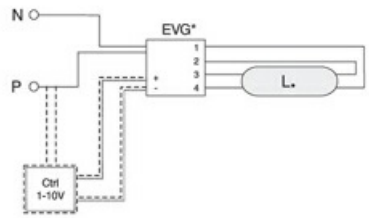

One-lampe ciruit with electronic ballast
Key:
VG = ballast electronic (ECG)
P = phase
N = zero potential
Ctrl = Controller, dimmer

The required control gear (here electronic ballast) for the lamps operation is usually mounted in the suitable luminaire in an appropriate electric circuit. Changes of any kind are to be conducted by qualified and specialised staff, only. Thus, this circuit example is to be understood merely as a technical background information for interested users.

Special features



General notes

The technical design data in accordance with DIN and IEC. The producer does not take any responsibility for damage to persons or property in case of unsuitable operation or handling of the product. Operating data and dimensions are valid within the usual tolerances. Related lamp types (different bases, mains voltages) may be available on request. Sale and delivery are effected in accordance with the Radium Terms of Delivery and Payment valid on the day of conclusion of contract. Packing units offer economical advantages to the purchase and logistic department. Please match your quantity volume accordingly. For orders of a minimum quantity (clefts) with a lamp model the amount lower than the volume of each packaging unit, we will invoice 10 % additional charge per lamp type. Technical changes and terms of delivery are reserved. Manipulation of any kind to packaging or product is not permissible as this will violate Radium brand rights. Furthermore, technical properties of the product can change to its disadvantage or even destruction. Therefore, Radium cannot be responsible for consequential damages.
® = Registered trademark

Fluorescent lamp Bonalux®Ring

NL-T5 22W/840C/2GX13

Radium

Subject to change without notice. Errors and omissions excepted.

All technical data without guarantee.